Product data sheet
Miniature connectors

Product description	**Snap-In Male cable connector, Contacts: 12, 6.0-8.0 mm, unshielded, solder, IP67, UL, VDE**
Area	**Snap-in IP67**
Part no.	**99 9133 52 12**

Illustration

Scale drawing

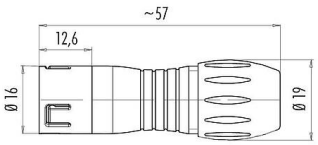

Contact arrangement (Plug-in side)

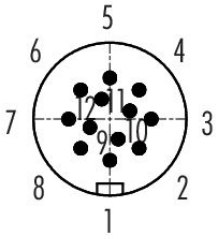

You can find the assembly instructions on the next page.

Technical data

General features

Part no.	99 9133 52 12
Connector design	Male cable connector
Version	Connector pin straight
Connector locking system	snap-in
Termination	solder
Degree of protection	IP67
Cross-sectional area	max. 0.25 mm² / AWG 24
Cable outlet	6.0-8.0 mm
Temperature range from/to	-25 °C / 85 °C
Mechanical operation	> 500 Mating cycles
Weight (g)	10.64
Customs tariff number	85369010
Country of Origin	DE

Electrical parameters

Rated voltage	60 V
Rated impulse voltage	800 V
Rated current	2.0 A
Insulation resistance	≥ 10^{10} Ω
Pollution degree	2
Overvoltage category	II
Insulating material group	II
EMC compliance	unshielded

Product data sheet
Miniature connectors

Product description	**Snap-In Male cable connector, Contacts: 12, 6.0-8.0 mm, unshielded, solder, IP67, UL, VDE**
Area	**Snap-in IP67**
Part no.	**99 9133 52 12**

Material

Housing material	PA
Contact body material	PA (UL94 HB) red
Contact material	CuZn (brass)
Contact plating	Au (gold)
REACH SVHC	CAS 96-45-7 (Imidazolidine-2-thione) CAS 7439-92-1 (Lead)
SCIP number	65feb047-a951-40fe-8fc4-028ec44c3c34

Authorization/approvals

Approvals	UL, VDE

Classifications

eCl@ss 11.1	27-44-01-02
ETIM 9.0	EC002635

Declarations of conformity

Low Voltage Directive	2014/35/EU (EN 60204-1:2018;EN 60529:1991)

Assembly instructions

1. Bead sleeve, seal, pinch ring and pressing screw to cable.
2. Dismantle cable to 15 mm length.
3. Strip and connect single wires.
4. Screw the sleeve onto the assembled contact insert.
5. Push seal and pinch ring into the sleeve and tighten it with the pressing screw.

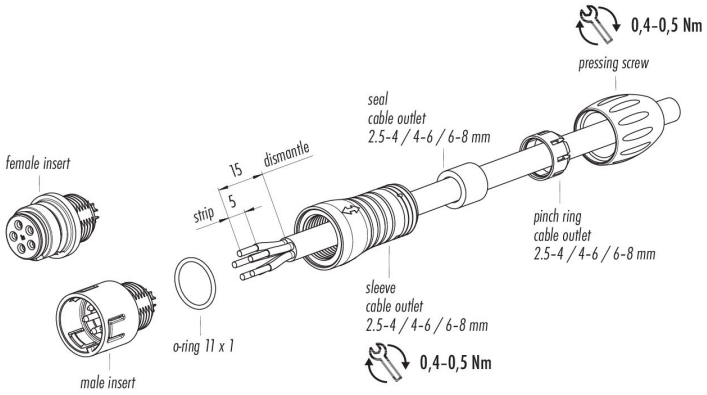

Date: 22.04.2024

Product data sheet
Miniature connectors

Product description	**Snap-In Male cable connector, Contacts: 12, 6.0-8.0 mm, unshielded, solder, IP67, UL, VDE**
Area	**Snap-in IP67**
Part no.	**99 9133 52 12**

Security notices

The connector must not be plugged or unplugged under load. Non-observance and improper use can result in personal injury.

The connectors have been developed for applications in plant engineering, control and electrical equipment construction. The user is responsible for checking whether the connectors can also be used in other areas of application.

To protect against unintentional opening of the connector, the thread between the housing and the connector head must be secured with a suitable cyanoacrylate adhesive when used in circuits with voltages dangerous to the touch. This does not apply to connectors used in SELV and PELV circuits according to IEC 61140 (EN 61140, VDE 0140-1).

Connectors which are used in circuits with voltages dangerous to the touch may only be installed and used by, or under the supervision of, persons with electrical engineering training, taking into account the applicable regulations and standards.

Plug connectors with enclosure protection IP67 and IP68 are not suitable for use under water. When used outdoors, the plug connectors must be protected separately against corrosion. For further information on the IP protection classes, please refer to the "Technical Information" download centre.